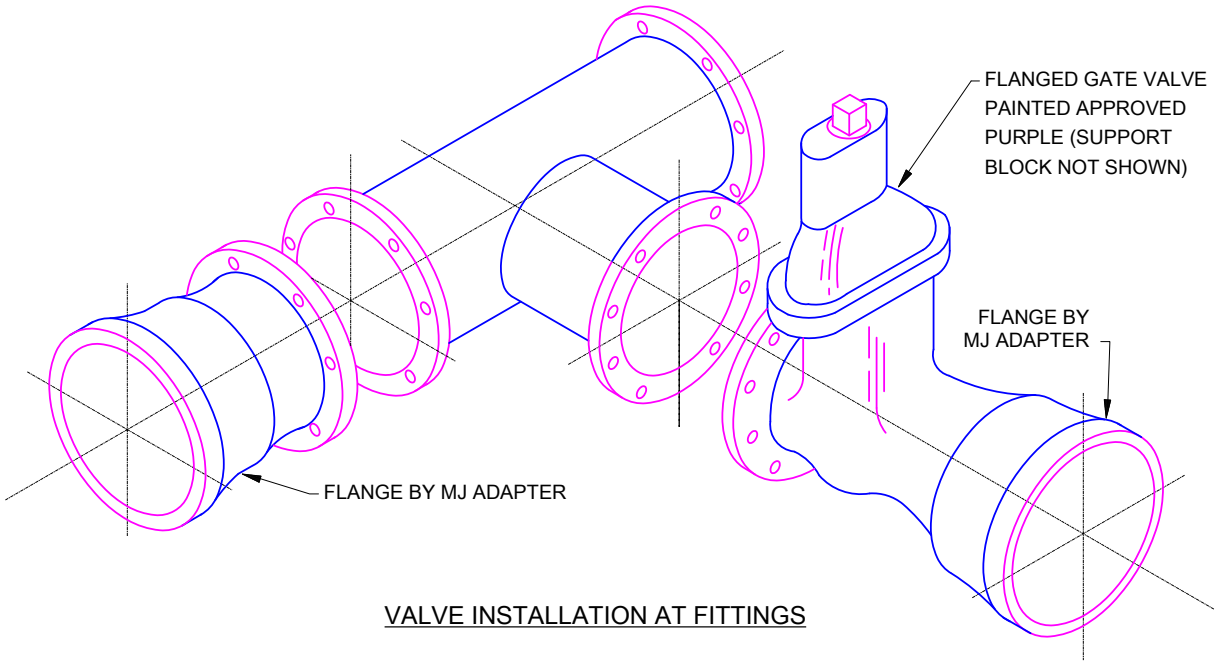

VALVE INSTALLATION AT FITTINGS

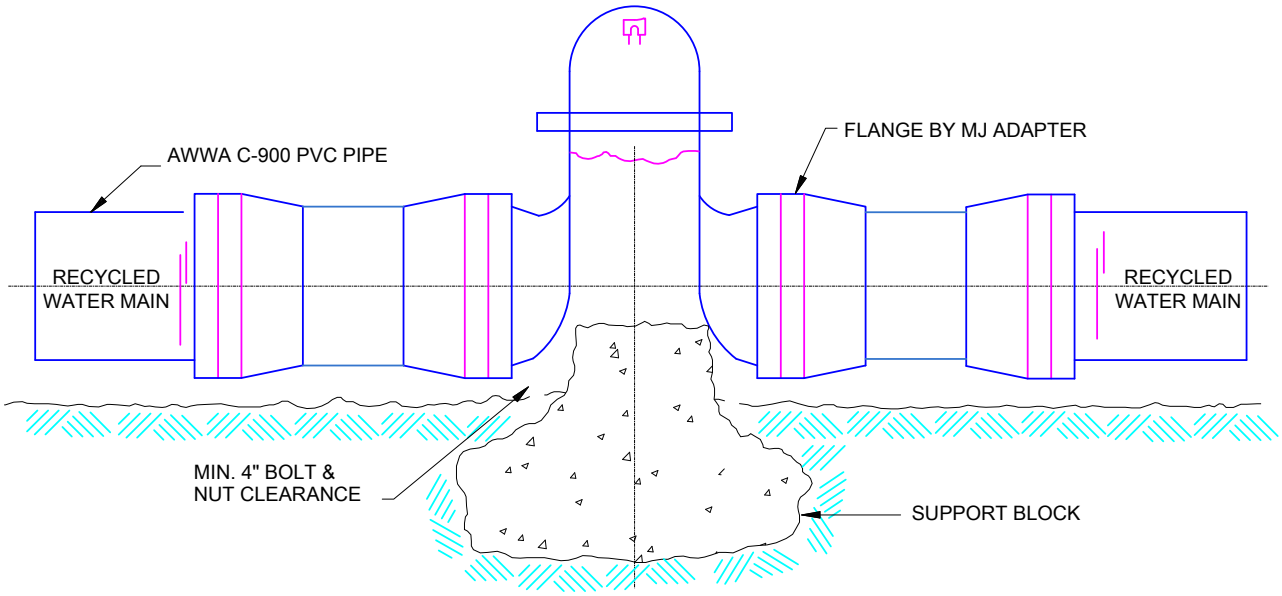

LINE VALVE INSTALLATION

	APPROVED DATE: January 1, 2011 DIRECTOR OF ENGINEERING	RECYCLED WATER STANDARD DRAWING TYPICAL VALVE INSTALLATION AWWA C-900 P.V.C. PIPE	STD. DWG. NO. W-1255